All Glass Revolving Door
ASSA ABLOY RD300

ASSA ABLOY
Entrance Systems

The global leader in
door opening solutions

ASSA ABLOY Entrance Systems beautiful, all-glass 3- or 4-wing revolving doors are the crown jewels within our energy-saving entrance portfolio and a high-tech masterpiece for any building

The beauty of a green entrance
With the ASSA ABLOY RD300 revolving door your indoor climate will be safeguarded against unwanted air infiltration, enabling you to take control of your energy consumption without compromising with a welcoming, luxurious entrance.

Since revolving doors are always open, yet always closed – no wonder they are referred to as "The Green Machines". What you spend on a new impressive entrance, you will gain in energy-savings due to optimal separation of climate zones.

Beautiful on the inside and out
From design to installation and operation – our all-glass revolving doors incorporate beauty inside out.

Technical specifications	
Power supply	230 V, 50 Hz, mains fuse max. 10 AT, 100-120 V, 50/60 Hz, mains fuse max. 16 AT
Power consumption	
Standard drive unit	200W / resting 30W
Max. support	400W / resting 30W

State-of-the-art convenience
The all-glass revolvers are available in a variety of diameters, ensuring optimal convenience for staff, customers and guests accompanied by goods or luggage. And staying true to our reputation – market leading in safety, naturally.

Serviceability
This unique and state-of-the-art control system was developed with no compromise in design or function. The system ensures lowest operating and maintenance cost, while ensuring the highest safety and best performance.

Optimizing installation time and maintenance:

- The ASSA ABLOY RD300 is equipped with a program selector with access codes to operate the door
- Automatic system check up upon installation
- Fast and safe adjustments and initial set up of all safety zones and speed settings
- Self-checking of safety systems
- Automatic indication of service intervals
- Automatic event log
- Automatic diagnostics

Safety
The all-glass door range has user safety as its number one priority.

- To prevent injury, the drum edges are equipped with soft safety edges
- If an obstacle prohibits the rotation of the door (the resistance is higher than the pre-set value) the rotation will cease
- Horizontal safety switches on the rotating doors
- Speed control
- State-of the art sensors for safety, activation and comfort

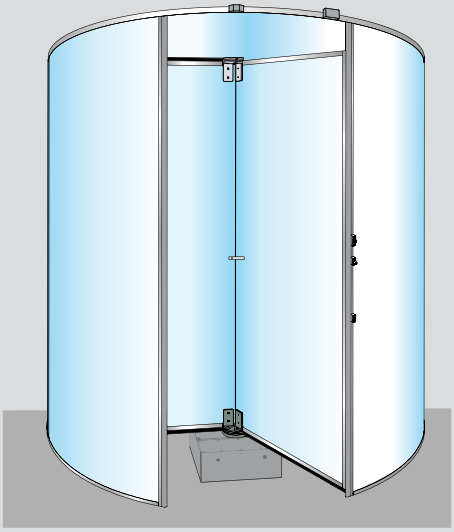

ASSA ABLOY RD300-3

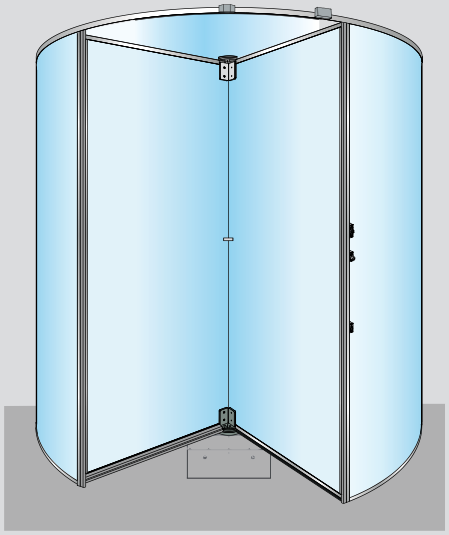

ASSA ABLOY RD300-4

Design
Design is more than what meets the eye. Design can also equal convenience and comfort, for example when it comes to flexibility in configurations and aesthetics to match your needs and building design. It can also support serviceability by keeping it simple.

- ASSA ABLOY RD300 is available in various sizes with flexible internal height
- In-ground drive mechanism for optimal aesthetics and minimal noise
- Designed for minimal floor preparation and ease of maintenance
- Suspended night closing doors for optimal aesthetics

Security
Don't let the luxurious look and feel fool you – the ASSA ABLOY RD300 has building security incorporated into its design.

- Reinforced and glass through-out the revolving door
- Access levels and password protected user interface on program control device
- Optional manual night closing doors

ASSA ABLOY RD300-3

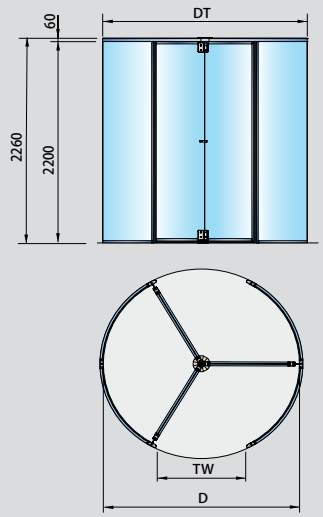

D	DT	TW
1800	1852	853
2100	2152	1003
2400	2452	1153
2700	2752	1303
3000	3052	1453

ASSA ABLOY RD300-4

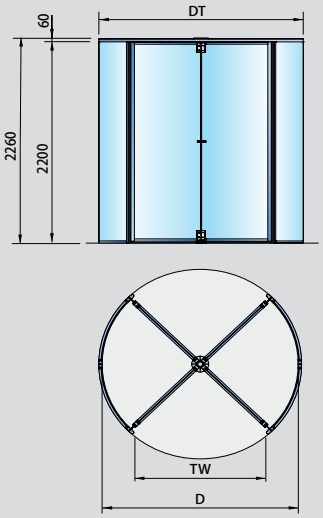

D	DT	TW
1800	1852	1237
2100	2152	1449
2400	2452	1661
2700	2752	1873
3000	3052	2085

Night closing doors (NCD)

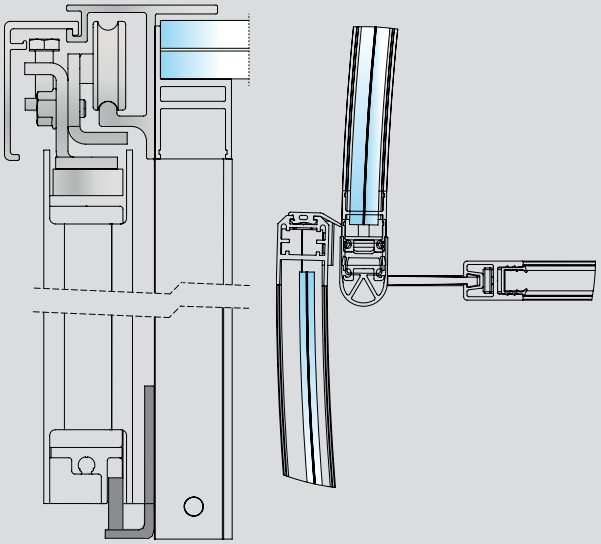

Standard equipment

Automatic drive
Control unit built-in under the ground
Vertical safety switches
Glass wall 8 + 8mm clear laminated
Glass door leaves 15mm tempered glass (2600 mm < HI ≤ 3000 mm) 12mm tempered glass (HI ≤ 2600 mm)
Glass ceiling 8+8 mm laminated glass
Door sections made from aluminium profiles
ASSA ABLOY activators
Fascia, standard height 60 mm
Emergency stop (inside)

Accessories and Options

Powder-coated finish
Stainless steel cladding
Mechanical lock
Electromechanical lock
Night closing doors (NCD), manual
Mechanical lock on NCD
Internal height non-standard (2000 - 3000 mm)
Disabled push button
Additional safety on rotating part
Concealed sensor lid
Emergency stop (outside)
Ground ring for unfinished floor

© ASSA ABLOY Entrance Systems AB - PD.RD300/ORG.en-6.0/1908 - 1012082 Technical data subject to change without notice.

This equipment should be installed, regularly inspected, maintained and serviced by trained and authorized personnel. Preventive maintenance plans are highly recommended for a proper and safe operation. Talk to your ASSA ABLOY Entrance Systems representative to learn more about our service offering!

ASSA ABLOY Entrance Systems
Tel: +46 (0)10 4747 000
info.entrance@assaabloy.com
assaabloyentrance.com

ASSA ABLOY as word and logo are trademarks owned by the ASSA ABLOY Group.